PANTONE REPORT : THE PAGES OF MICHEL DAVID

PAGE 1

BEFORE STARTING THE CONSTRUCTION AND INSTALLATION OF A PANTONE SYSTEM ON AN ENGINE

Page created on January 21, 2001 Return to menu M.David

Following the passage on this site of the plans of the GEET reactor of Mr. PANTONE, of the demonstration of the experiment which we made and of its detailed communication, there remain many points to clarify on the operation of the assembly.

As many of you are considering equipping different types of motors with this device, I thought, in order to help you, to share with you my modest experience in this matter.

I guess you are not completely new to the subject, and that you have been interested in everything we have done and described on the small 4 stroke engines that we have fitted. You have noticed that the principle of the GEET reactor of Mr. PANTONE is devilishly simple, that its operation remains for the moment a little obscure and the explanations provided by both parties remain contradictory.

It doesn't matter since it works and it's easy to build and experiment on all types of engines.

I therefore remind you that the device which is the subject of the patent is composed of an ordinary iron tube inside which is concentrically fixed a steel bar of sufficient diameter so that only a space of 1 to About 2 millimeters between this rod and the inner wall of the tube. For the operation of the device to be at the top level, provision should be made for heating this tube containing the steel bar. This heating is therefore obtained by installing the tube called "reactor tube" inside another metal tube and by causing the engine exhaust gases to circulate therein against the current (see drawing).

If we pass the volatile parts of any hydrocarbon through the reactor tube, they decompose into a hydrogen-based fuel gas, the efficiency of this transformation will improve with the temperature of the reactor and the magnetic state of the steel bar oriented North / South at the first start-up.

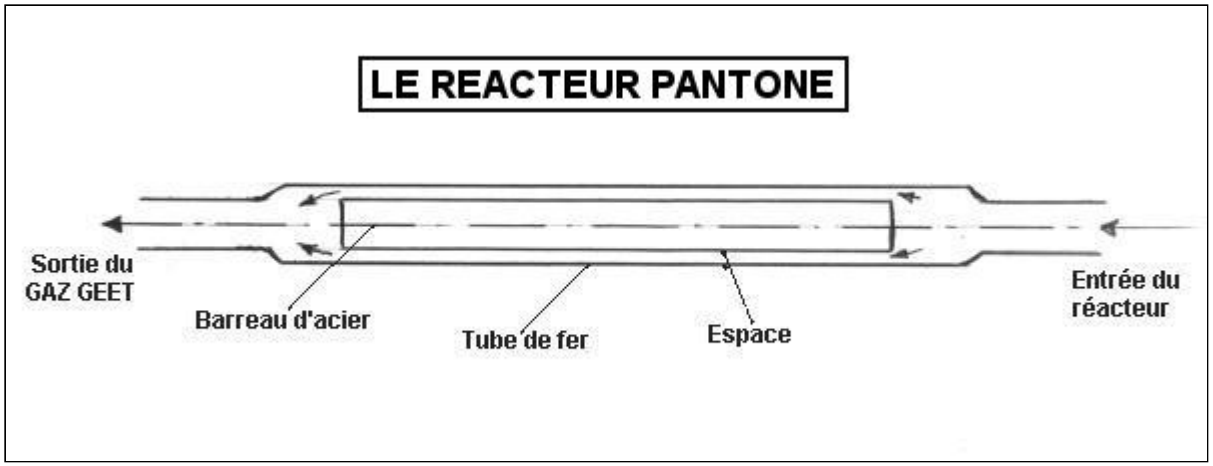

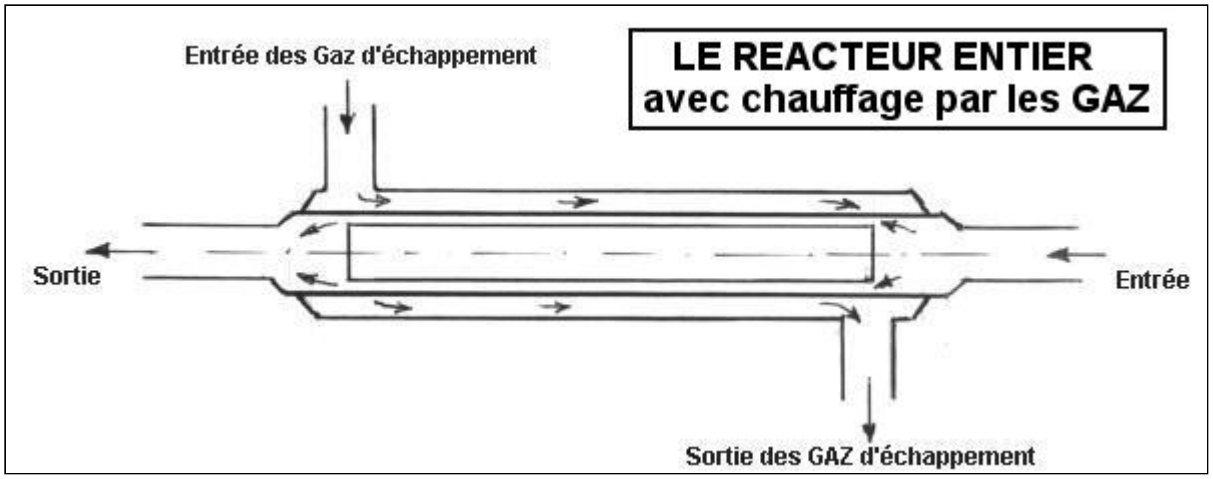

144 cm3 engine reactor:
rod diameter 8 mm - length 160 mm - reactor tube internal diameter 10 mm

It doesn't matter what is really going on in the reactor, but the point is, we get gas of such quality that it can run any type of 4 stroke engine with any compression ratio, and a negligible level of pollution. It also benefits from a significant fuel economy at equal power.

<u>WHAT YOU SHOULD HAVE UNDERSTOOD BEFORE STARTING THE CONSTRUCTION AND INSTALLATION OF A GEET PANTONE ON AN ENGINE.</u>

All of the explanations below are intended to save you time and show you the difficulties you will need to overcome. So from the start, if you have not properly developed the chosen fuel volatilization device, you will not be able to operate and control your GEET reactor correctly.

You should have understood that it is preferably the volatilized fuel that must be passed through the reactor and in no case a vaporization of this fuel in the form of droplets. If an attempt is made to operate a reactor with atomized fuel, this atomization should be as fine as possible.

From the start of your project, you have to choose the fuel and the mode of transformation chosen, that is to say volatilization or spraying. Whichever you choose, you'll have a hard time developing either of these systems. My remarks on these two systems will help you in your choice.

There is another difficulty which is common to all types of engines, it is that of obtaining at all engine speeds a good, well-proportioned mixture of GEET gas and air to have the best possible explosion and pollution. scaled down.

So you have come to understand that you will not have any particular problem coming from the reactor itself, because it will work the first time if it is according to plan.

Part of your tuning problems will therefore come from the volatilization or atomization system of the fuel used, and the rest of your difficulties will be in tuning the valve system to properly supply the engine at all speeds.

So, to make the chosen fuel in a state to be admitted into the reactor, you have the choice between two possibilities: 1-Spraying. / 2-Volatilization.

1-Spraying:
It must be as fine as possible, it can be carried out by an injector system and high pressure pump or by a kind of carburetor or compressed air sprayer such as paint guns.

I have started to experiment with these devices, they work, but are difficult to develop and do not spray certain fuels sufficiently.

I leave aside all comments on spraying and will come back to it when I have achieved something satisfactory in my experiments because it has significant advantages over volatilization.

2-Volatilization:
It is used in all the assemblies exposed, it is the simplest solution to implement for the experimental assemblies intended to become acquainted with the invention of Mr. PANTONE, especially if one uses as fuel, a product volatile at low temperatures, like gasoline. But we must not kid ourselves, this solution is also difficult to implement and master as soon as we want to install it seriously on an engine intended to operate continuously as on an automobile

or other equipment.

With volatilization, the problems of mixing the air with the gas leaving the reactor remain as difficult to solve as with spraying.

On the other hand, volatilization seems to give the best results for preparing the fuel for the conversion which takes place in the GEET reactor.

Some of your tuning issues are also going to be keeping the fuel level constant in the "bubbler", especially when you want to add water to the chosen fuel.

That said, for our first tests, let's fix our choice on volatilization and on gasoline as fuel, and possibly with the addition of water. Gasoline being a product which evaporates easily at low temperature as long as it is stirred with air or any gas, it is therefore interesting to work with this product.

First of all let us remember not to confuse volatilization and vaporization, the volatilization which interests us here is produced by the passage of air or exhaust gases through the fuel more or less heated to promote them .

Vaporization, which is produced solely by boiling the fuel, should be avoided because, depending on the fuels used, the reactor does not or does not work well. It will therefore be necessary to avoid, when using a "bubbler" heated by the exhaust, not to rise in temperature to the point of boiling the fuel, but that the temperature is just sufficient to promote the volatilization of the latter thanks to the circulation of air or exhaust gas (by bubbling).

With the bubbler system you have the possibility of evaporating the gasoline either with the ambient air or with a little exhaust gas. It is the latter solution which has been used in all the assemblies described up to now.

1- First possibility, volatilization by the exhaust gases:

This way of proceeding consists in passing a little exhaust gas through the mass of the fuel which produces a "bubbling", the volatilized gasoline mixed with the gas fills the upper part of the tank and is available to be sucked into the tank. reactor.

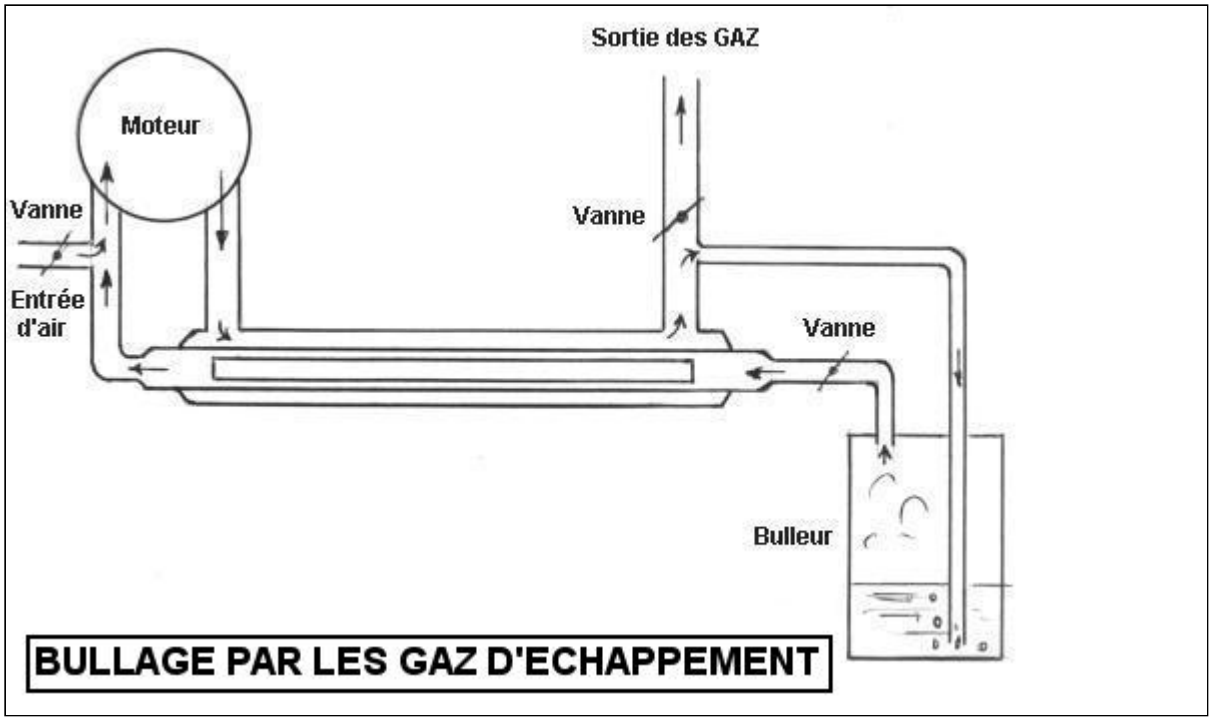

This simplistic solution, but convenient for first experiments, has more drawbacks than advantages. Thus, the heat of the exhaust gas will prevent the fuel from cooling down to the point of evaporating only with difficulty; this seems an advantage, but in reality the temperature of the bubbler will be completely random, the vaporization being able to oscillate between the insufficiency and the exaggeration which makes the control of the motor delicate and possible only with the permanent adjustment of the valves. By this means, the correct proportions of the components of the explosive mixture reaching the engine are practically impossible to obtain correctly over the entire speed range of the engine.In conclusion, if we try to evaporate a fuel which is never at the same temperature with a gas which is itself in the same case, we have no chance of correctly supplying the reactor in a linear fashion unless you spend your time to manipulate the various valves and without knowing where we are in the quality of the detonating mixture.

In the event that you "bubble" with the exhaust gases, it must be understood that it is not clear whether the vapors are pushed into the reactor more than they are sucked. We realize with experience that we are obliged to maintain the bubbler at a slight overpressure and that it is necessary to regulate the flow of steam towards the reactor with a valve which becomes essential in addition to the inlet valve. air between the engine outlet and the engine inlet, since it is the simultaneous adjustment of these two valves which produces the correct mixture for the engine. It is very complicated and impracticable in a simple way.

With this device we also have the following problem: the "bubbler" is finally under pressure, especially when there is water in the gasoline (need for more intense bubbling than for gasoline alone), we see that the gases leaving the bubbler are pushed into the reactor more than sucked. This leads, as I have already explained, that a significant part of the gas leaving the reactor, is rejected by the air intake valve when the engine is not in its filling period (25% of the time). This problem mainly concerns engines with less than 4 cylinders. To counter this drawback, we can put a non-return valve on the air inlet valve or manage to keep the reactor in depression, which in this case is practically impossible to achieve.

In summary, if you have carried out the experiment with the experimental reactor and its 4 valves, you must have already noticed what I have just told you, therefore and before considering a serious installation it is essential to master a certain number of settings.

2- Second possibility, volatilization by the ambient air.

With the "bubbler" system, instead of causing the fuel to volatilize by forcing a little exhaust gas to pass through it with all the disadvantages and advantages that I have just described, we can be satisfied with use ambient air to perform this function.

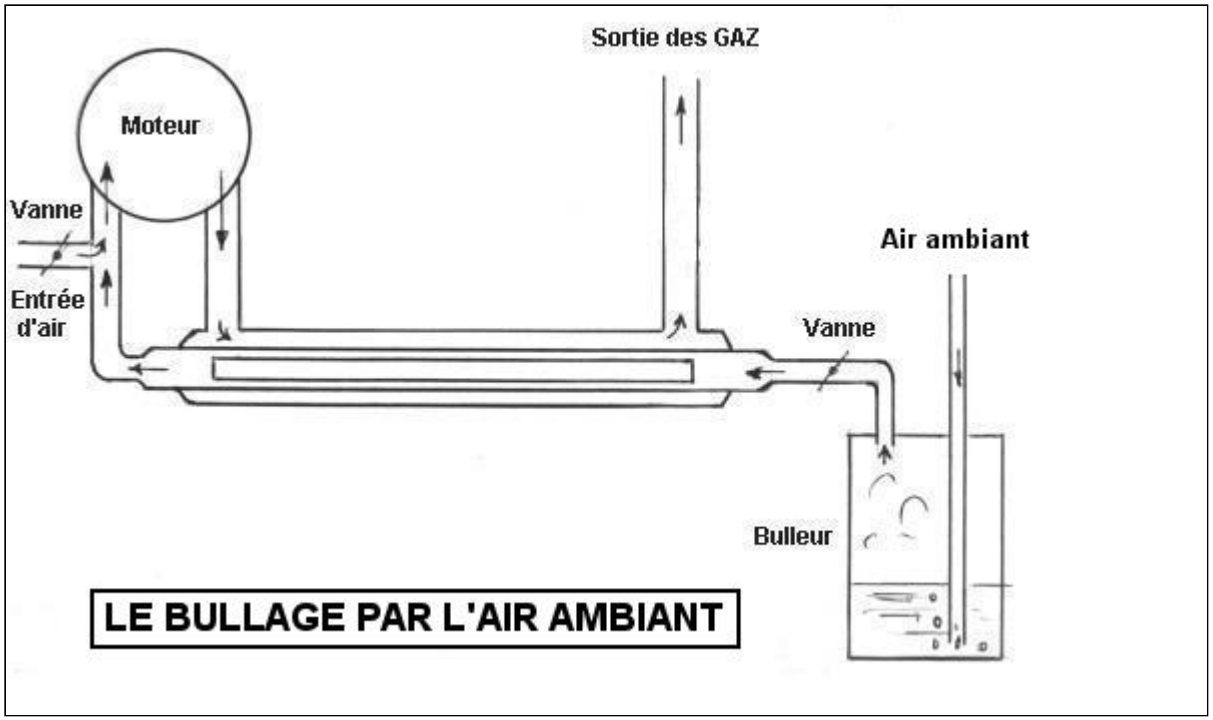

We are therefore satisfied with not connecting anything to the tube which plunges into the fuel and the simple depression produced in the bubbler can (engine suction) will produce the necessary bubbling.

This system works fine, but engine idling is a bit difficult to achieve due to lack of volatilization due to low engine suction at low speed (when it comes to small engines only). On the other hand, with this process we can envisage a kind of gas carburetor which, with a single valve, will ensure the correct composition of the fuel mixture at all engine speeds (see drawing).

There remains a drawback that is very easy to eliminate: after a few moments of operation, the gasoline in the "bubbler" cools and no longer volatilizes, which results in the engine stopping. In the previous case, the calories of the exhaust gases largely compensated for this cooling of the fuel. As it is very easy to design a “bubbler” at constant temperature, this drawback does not present an obstacle, it is even an advantage, because we can have a “bubbler” regulated at the desired temperature depending on the fuel chosen. It is even possible to envisage, if necessary, heating to the chosen temperature the air entering the bubbler and which is used for volatilization, which is very advantageous for the less volatile fuels.

After this overview of these two volatilization systems, you will understand that only the second can make it

possible to design a simple assembly where the most important parameters are easily controlled and at low cost, as you will be able to realize. account by the descriptions which follow. This second system allows to operate the engine very well with a single valve which will be a slightly modified conventional carburetor.

ON THE WATER CONSUMED BY THE ENGINE EQUIPPED WITH THE GEET PANTONE REACTOR.

All the experiments with the engines equipped with GEET show that a large percentage of water can be introduced into the gasoline and be "consumed" by the engine after having probably broken down into H and O in the reactor, but this under certain conditions.

If water is added to the gasoline in the "bubbler", it will partly volatilize with the gasoline thanks to the bubbling with the air or the exhaust gases, depending on the system adopted, the water is will decompose in the reactor into H and O and these gases will be added to the gases produced by the decomposition of gasoline (presumably hydrogen and carbon or carbon monoxide).

For your information, remember that when using water and gasoline in the same "bubbler", there is a correct operating range, that is to say that if the bubbler is too cold, it is above all the 'gasoline which will preferably volatilize with water by agitation with air or exhaust gas, and it will be the same if the temperature is too high, gasoline will volatilize even faster than water at because of its temperature which will require little gas insufflation compared to water. The threshold of correct operation is therefore critical. To overcome the situation, it is surely suitable to install two "bubblers" which can each be heated to the right temperature to ensure good volatilization. I haven't experienced these two separate bubblers, but it will come.When cold, the engine would start with gasoline and little by little with the heating of the water bubbler, the volatilization of the latter would be added to that of gasoline. In addition, it will be easier to supply each bubbler separately with water and gasoline (which must be at a constant level) with a tank system at constant level (float and needle). Note that during freezing weather, alcohol can be added to the water.

It is therefore difficult to control the problem of water consumption, and some are often disappointed in this regard during their first tests. The engine is not presented by the inventor as a water engine but only as a device capable of "consuming" it under certain conditions. These conditions must therefore be met.

A FEW OBSERVATIONS WHICH CAN HELP YOU.

When you make your first tests in very cold weather with your engine, you will observe the day after a test, that you

have difficulty starting with the gasoline of the day before remained in the "bubbler", while your engine was running. perfectly hot. You will only notice this problem if you have adopted the ambient air bubbling system. This is due to the fact that the gasoline remaining in the bubbler has lost a large part of its most volatile parts and that in very cold weather the simple bubbling by suction of the ambient air is unable to volatilize enough gasoline to make run the engine. For simple experiments you can be content to top up the level in your bubbler with fresh gasoline, but for serious engine equipment,it is necessary to provide a remedy for this drawback which will moreover be reduced in this circumstance since fresh gasoline will permanently feed the bubbler. It is therefore necessary to set up a manual or automatic cold start device which will consist quite simply in forcing the vaporization by temporarily diverting, for a few minutes, a little exhaust gas onto the inlet of the bubbler tube. This device is easy to implement either by a manual valve or by a thermostatic valve as for heating the bubbler. Thus after a few moments when the engine and the bubbler are at temperature, the device will switch off.It is therefore necessary to set up a manual or automatic cold start device which will consist quite simply in forcing the vaporization by temporarily diverting, for a few minutes, a little exhaust gas onto the inlet of the bubbler tube. This device is easy to implement either by a manual valve or by a thermostatic valve as for heating the bubbler. Thus after a few moments when the engine and the bubbler are at temperature, the device will switch off.It is therefore necessary to set up a manual or automatic cold start device which will consist quite simply in forcing the vaporization by temporarily diverting, for a few minutes, a little exhaust gas onto the inlet of the bubbler tube. This device is easy to implement either by a manual valve or by a thermostatic valve as for heating the bubbler. Thus after a few moments when the engine and the bubbler are at temperature, the device will switch off.or by a thermostatic valve as for heating the bubbler. Thus after a few moments when the engine and the bubbler are at temperature, the device will switch off.or by a thermostatic valve as for heating the bubbler. Thus after a few moments when the engine and the bubbler are at temperature, the device will switch off.

I explained to you that I had not yet tried to make an assembly with two bubblers, one for gasoline and one for water, but if you go faster than me, then build two similar bubblers with the coil heater and thermostatic valve.

For each of these heaters, provide a sufficiently long copper or stainless steel coil in a 10 or 12 mm diameter tube. You should plan large, because if the gasoline bubbler only needs to be heated to about 25 or 30 °, the water bubbler will probably require a temperature of 60 to 80 °. If for the bubbler you could not reach the desired temperature by taking the exhaust gases at the outlet of the reactor, make a tapping directly on the exhaust at the inlet of this one.

If you want to further improve your business you can consider heating the air to a constant temperature ensuring the vaporization before it enters the bubbler. You can easily freeze this last rather unstable setting. Make another small exchanger with a small tank equipped with the same coil and thermostatic valve device as for the bubbler, install another coil through which you will circulate the air. Obviously, fill this exchanger with any liquid before start-up. With this device, the volatilization air will have the temperature you want, after the assembly has warmed up obviously.

It may also be advantageous to insulate the reactor with a sleeve of glass wool or other product, to keep it at high temperature in all circumstances.

Page 1 Page 2 Page 3 Page 4 Page 5 Page 6 Page 7 Page 8 Page 9 Page 10 Page 11 Page 12 Page 13 Page 14 Page 15 Page 16

Menu Summary Home

www.quanthomme.com and www.quanthomme.org